PROGRAMMABLE TCXO

YSO511PJ

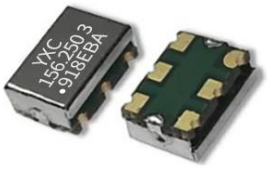

Applications

- Any frequency

Features

- One time programmable
- integrated phase jitter performance of 0.8 pS RMS
- Low jitter design with new developed IC
- Package Size: 7.0*5.0mm.

Specifications

Frequency Range	10MHz to 250MHz							
Supply Voltage VDD	2.5V, 3.3V							
Operating Temperature Range	-40~+85℃,or specify							
Storage Temperature Range	-55~+150℃							
Output Type	CMOS							
Rise Time/Fall Time (Tr / Tf : 10% ⇔ 90% waveform)	1.5 nsec. (typ.) , 3.0 nsec. (max.)							
Duty Cycle	45~55%							
Start-up Time	5.0 msec. (max.)							
RMS Jitter [12 kHz ~ 20 MHz]	0.8 psec (typ.)							
Current Consumption (max.) (VDD = + 2.5V)	Vdd=2.5V				Vdd=3.3V			
	50 MHz : 34 mA 125 MHz : 38 mA 200 MHz : 40 mA				50 MHz : 36 mA 125 MHz : 40 mA 200 MHz : 44 mA			
Frequency Stability	Aging at Ta = +25°C				± 1.0 ppm max . , per year at 25°C			
	Temperature (ref to +25°C)				± 2.5 ppm over -30°C to +85°C (default)			
					± 1.0 ppm over -40°C to +85°C (available)			
	Voltage Change				± 0.2 ppm max . , for a ±5% input voltage change.			
	Load Change				± 0.2 ppm max . , for a ±10% load condition change.			
	Reflow				± 1.0 ppm max . , 1 reflow and measured 24 hours afterwards.			
Phase Noise [dBc / Hz (typical)]	Offset	10 Hz	100 Hz	1K Hz	10K Hz	100K Hz	1M Hz	10M Hz
	125 MHz	-51	-93	-111	-123	-125	-135	-155
	212.5 MHz	-42	-87	-105	-115	-118	-130	-151
	312.5 MHz	-49	-88	-107	-111	-114	-124	-147

PROGRAMMABLE TCXO

YSO511PJ

Dimensions and Patterns [unit:mm]

Package Size – Dimensions (Unit: mm)	Recommended Land Pattern (Unit: mm)
7.0*5.0mm 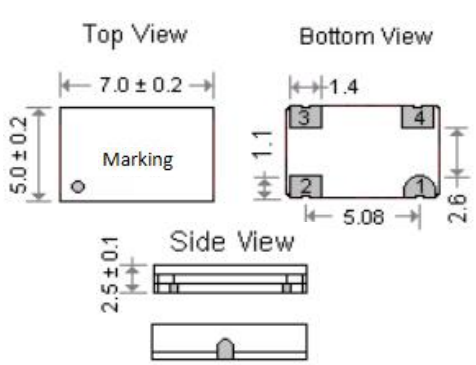	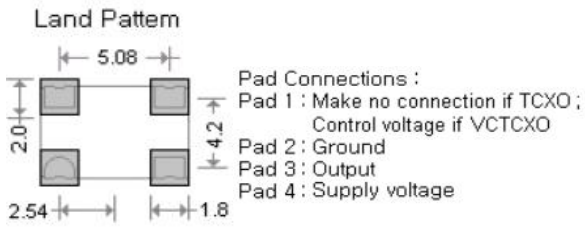
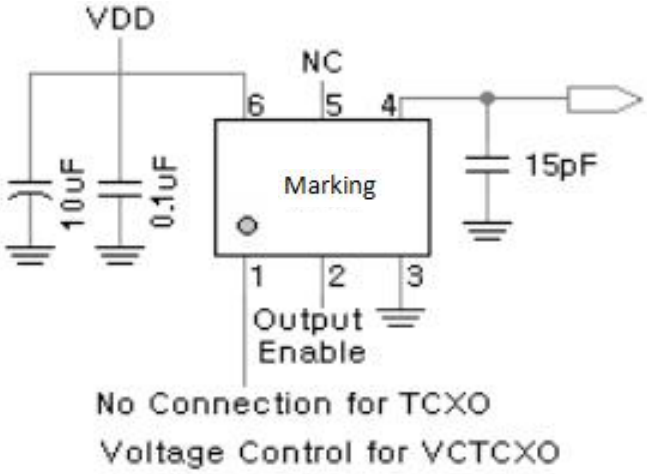
Test Circuit